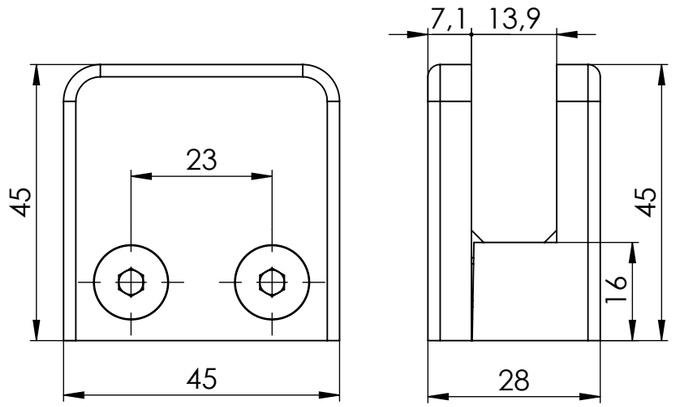

B20		
Art.-No.	Finish	Material (X)
BO 8720100	raw	zinc
BO 8720122	shiny chrome plated	zinc
BO 8720163	stainless steel look	zinc
BO 8720516	polished	stainless steel V4A
BO 8720555	brushed	stainless steel V4A
BO 8720955	brushed	stainless steel V2A

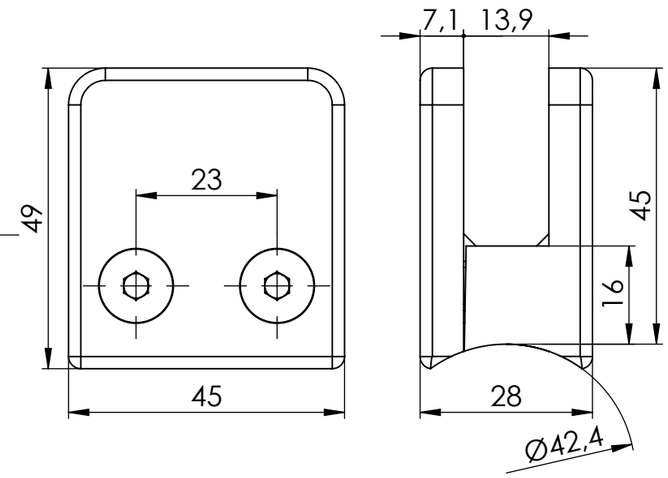

B22		
Art.-No.	Finish	Material (X)
BO 8722100	raw	zinc
BO 8722122	shiny chrome plated	zinc
BO 8722163	stainless steel look	zinc
BO 8722516	polished	stainless steel V4A
BO 8722555	brushed	stainless steel V4A
BO 8722955	brushed	stainless steel V2A

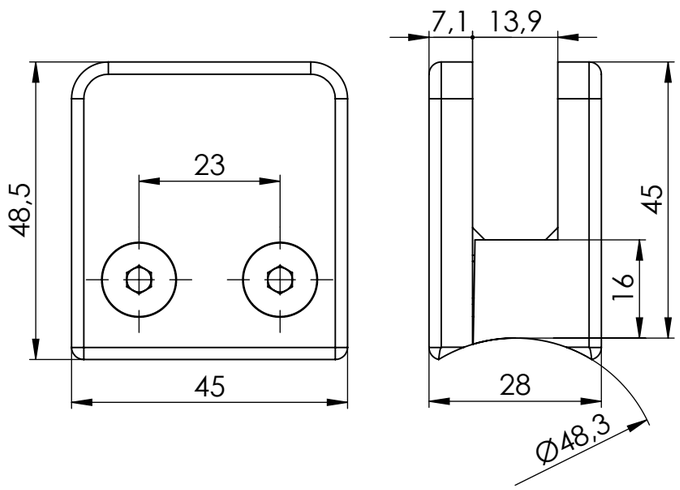

B24		
Art.-No.	Finish	Material (X)
BO 8724100	raw	zinc
BO 8724122	shiny chrome plated	zinc
BO 8724163	stainless steel look	zinc
BO 8724516	polished	stainless steel V4A
BO 8724555	brushed	stainless steel V4A
BO 8724955	brushed	stainless steel V2A

Glass processing for securing pin

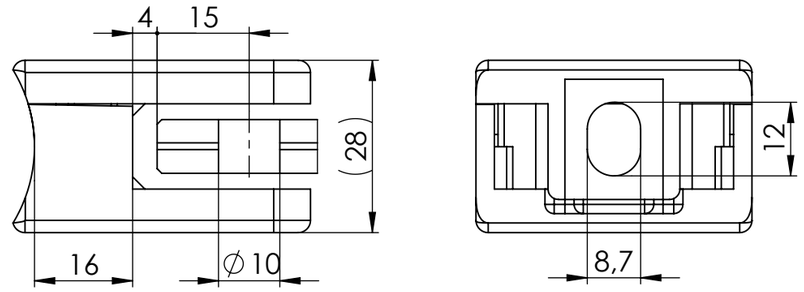

Securing plates BO 8920001

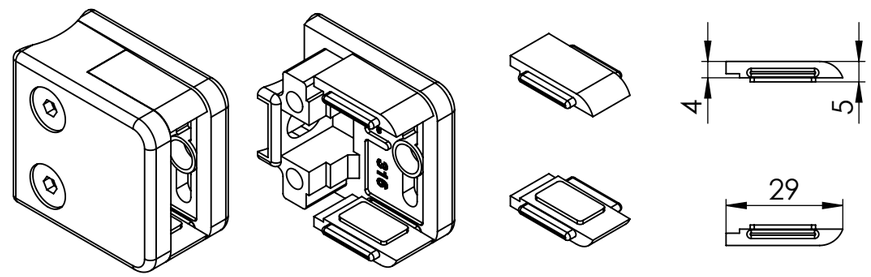

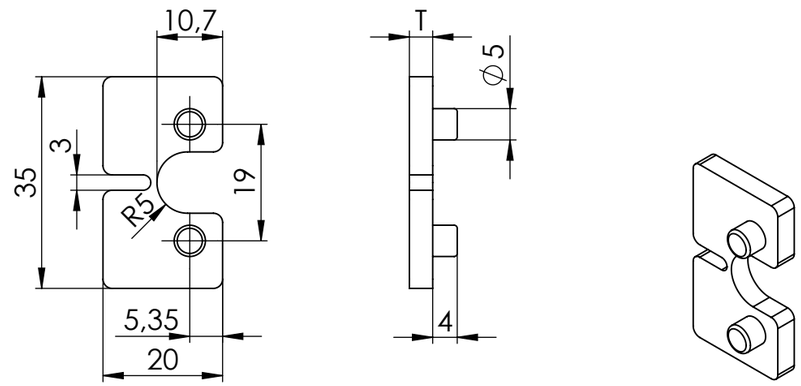

Art.-No.	T	Glass
BO 8820060	5mm	6mm
BO 8820080	4mm	8mm
BO 8820090	3,8mm	8,76mm
BO 8820100	2,8mm	10mm
BO 8820110	2,7mm	10,76mm

Maßstab/Scale: 1:1

Bemerkung/Comment:

Material:

Bezeichnung/Description:

Clamp

B20 B22 B24
45mm x 45mm

Artikelnr./Articleno.: B20 - B22 - B24

Clamp Collection

Index 00-A

Blatt/Page 1 von 1

A3

Bohle

	Datum/Date	Name/Name
Bearb.	29.06.2021	Geier

Diese Zeichnung darf ohne unsere vorherige schriftliche Zustimmung weder vervielfältigt noch Dritten zur Kenntniss gebracht werden

This drawing may not be reproduced and be brought to the knowledge of any third without our prior written consent.

Bohle AG · Dieselstraße 10 · D-42781 Haan T +49 2129 5568-0 · info@bohle.de